GREENFLEX

"ALL PV MODULES LOOK THE SAME "

GreenFlex modules are different

on the outside, and on the inside

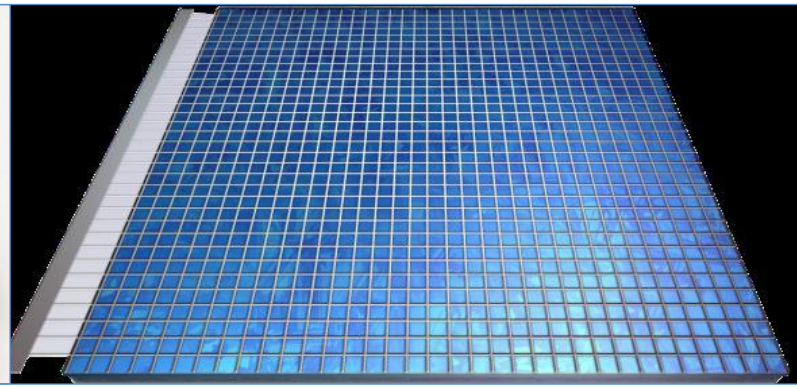

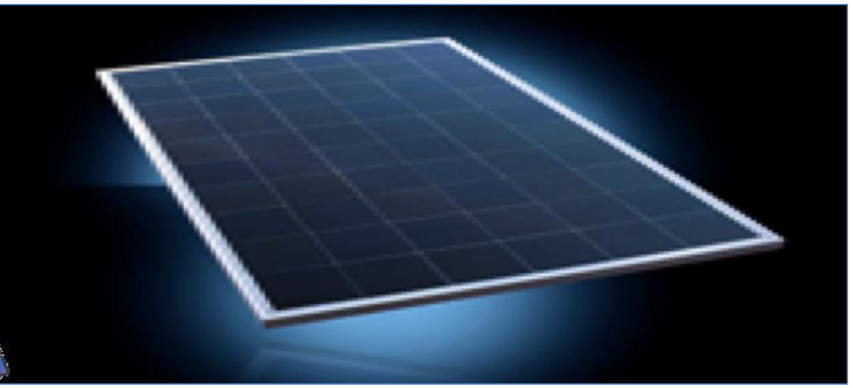

Technical Partners

DAY4 ENERGY

GREEN POWER INDUSTRIES LTD

Bluenergy

MANUFACTURING EXCELLENCE

The Day4 cell interconnection technology minimizes cell-to-module energy losses. In addition, the low temperature production technology allows the use of ultra thin and temperature sensitive PV cell.

The combination of this technology, along with the proprietary optimization package produces one of the most efficient module available in the industry.

Green Power Industries and Day4 have a strong partnership in solar technology to bring costs down through the application of state-of-the art technology and manufacturing process.

Here are five reasons to use a Greenflex PV Module

1.	Superior collection in low light conditions	=	more kWh produced in a day
2.	Better cell's interconnection	=	less kWh losses due to cell resistance
3.	Industry's best temperature performance	=	less kWh losses over time
4.	Engineered and built for maximum durability	=	less kWh losses in harsh environment
5.	Produce power when partially covered.	=	less kWh losses due to shading

GREENFLEX

FLAT PV MODULE LINE

20 YEARS PRODUCT WARRANTY · 25 YEARS POWER WARRANTY · 2025

1 More Energy Every Day

- Low metallization solar cell technology
- Industry leading power collection
- High efficiency in low light conditions
- Self cooling PV cell technology results in lower operating temperature

+2 Under Real World Conditions

- 3 times less sensitivity to shading and debris allows installation in previously unsuitable areas
- Certified salt mist resistant technology ideal for coastal areas
- Optimal protection against harsh environment in greenhouse and farming applications
- Rated for extreme snow loads with 5400 N/m² front load
- Extra strong 40mm aluminum frame

+3 Stable Over Time

- Highly resistant backsheet with aluminum layer
- Microcrack resistant cell technology
- Thermal stress relief encapsulation technology
- Reliable PV cell interconnection – over 2100 independent electrical contacts on each cell

+4 Lower Installation Costs

- Less space required due to best in class power density of up to 150 W/m²
- Up to 25% more energy from the project area
- Less mounting and wiring costs due to greater power density and intelligent shade protection
- Plus sorted – get more than you paid for

DAY4 ENERGY = Higher Return

FLAT, FLEXIBLE & HYBRID Solar Modules

YOUR ASSURANCE OF QUALITY AND DURABILITY

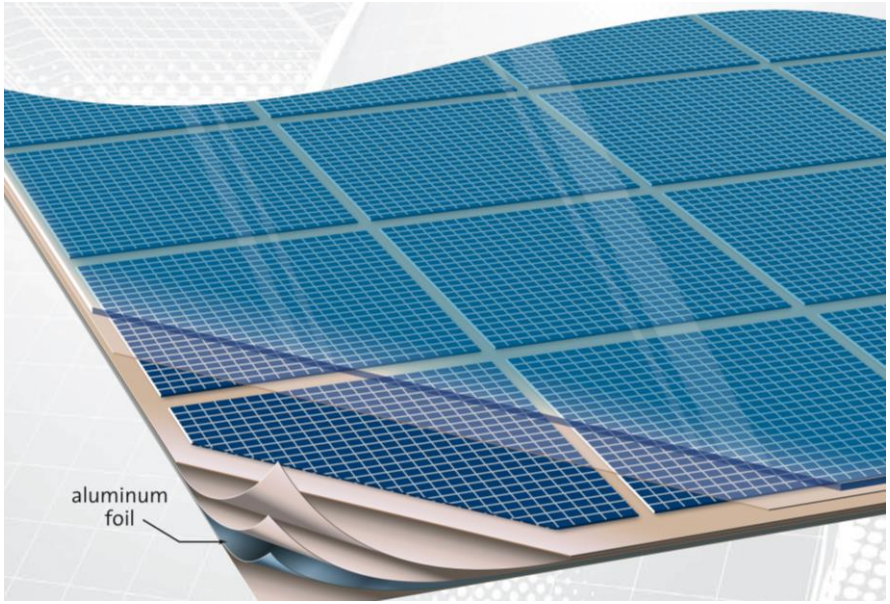

Solar photovoltaic (PV) modules perform well under ideal conditions, particularly during their initial years of operation. Challanging environmental conditions over 20 years of use may significantly effect the performance of conventionally built modules. kWh losses in 20 years may be as high as 20%. Our proprietary technology is an assurance of durability, quality and that the modules meet your performance expectations for two decades or more. Advanced technologies, quality components and superior manufacturing processes go into every module assembled by Greenflex.

Solar modules with Day4 technology feature a watertight backsheet lined with aluminum foil. Certified to protect from the damaging effects of moisture and salt-mist, these solar modules are immune to harmful gasses like ammonia found at greenhouses and farmland, and designed to perform exceptionally well even in hot desert climates.

Features

- *Self cooling technology*
- *Watertight encapsulation, gas-proof*
- *Unique multi-layer backsheet with aluminum foil layer.*
- *Certified salt-mist resistant*
- *High quality electrical components*

Benefits

- *Increased strenght and durability*
- *Prevent moisture from penetrating the module*
- *Optimal protection in coastal regions and harsh environments (farms, greenhouses)*
- *Leading performance with low light conditions.*
- *Protection against UV, extreme temepratures and corrosion.*

GREENFLEX

FLAT, FLEXIBLE & HYBRID Solar Modules

INTELLIGENT SHADE PROTECTION FOR REAL WORLD CONDITIONS

Shade reduces the efficiency of solar PV modules. A unque technology developed by Day4 enables optimum performance by maximizing the energy yeld, even when the module is shaded by trees and buildings or partially covered by leaves, dirt or snow.

Conventional solar modules contain three zones of interconnected cells. When even a small portion of one zone is shaded, the entire zone may no longer collectenergy, reducing the module performance.

The cell layout in a Greenflex module with Day4 technology allows the design of up to nine independent operating segments. If one is shaded, the other eight keep working,

GreenFlex PV Module with 8 independent shading control zones

DAY4

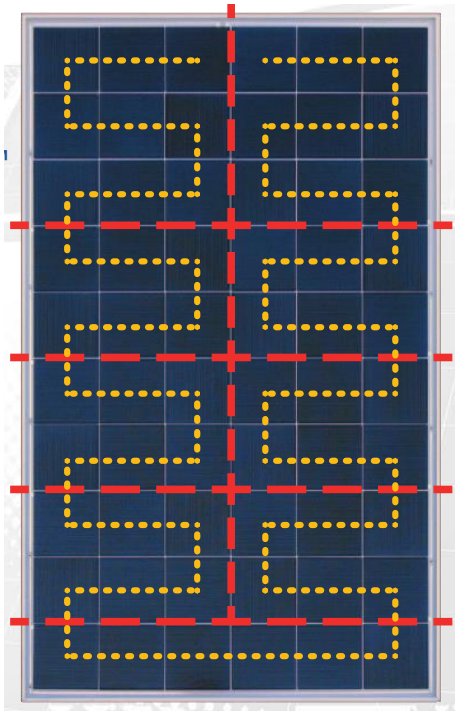

Conventional Module

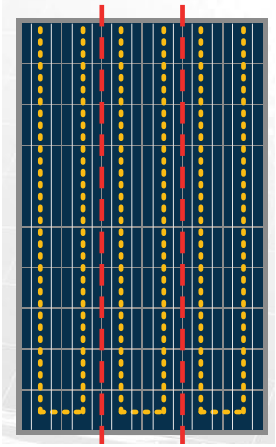

Features

- *Greater flexibility in how cells are configured and interconnected*
- *Up to nine independent zones*
- *If one cell is shaded, energy is re-directed and the module continue working*

Benefits

- *Excellent results in residential and commercial roof-top installations*
- *Protection from time-of-day shading and accumulation of snow or debris*
- *Higher energy yeald over lifetime of installation.*

GREENFLEX

FLAT, FLEXIBLE & HYBRID Solar Modules

BETTER PERFORMANCE AND LONGEVITY

The core of our advantage is the Day4 patented technology that interconnects solar cells and collect the paower they generate. This innovation replaces the conventional high temeprature cell soldering process.

The system includes a polymer film emebdded with a net of copper wires specially coated with a low-temperature melting point alloy. This establishes a low-resistance electrical contact with the surface of the Cell, creating over 2.100 independent electrical contacts.

This seemingly simple solution triggers a number of far reaching benefits, including:
- Improved PV cell efficiency and mechanical stability.
- Exceptional PV module power density
- Better long term performance where it truly matters – in the field.

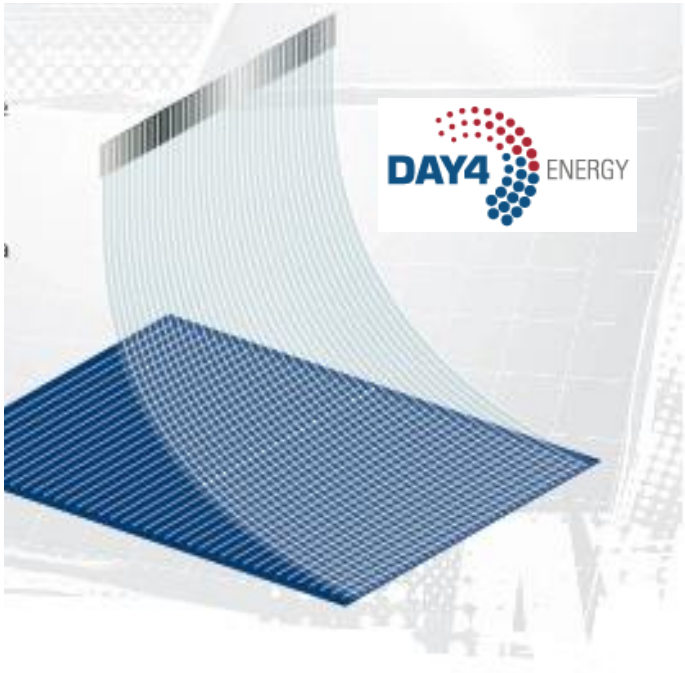

Benefits

- *Effective transporattions of electrons to a highly conductive contact with less resistance and heath generation.*
- *High efficiency in low light conditions.*
- *Low cells surface shading-alloy reflecting light back to the cell.*
- *Self cooling PV cell technology resulting in lower operating temperature.*
- *If a microcrack occurs, the electron flow continue.*
  Wires act as a bridge across any interruption.
- *More kilowatt hours with virtually no power losses from cell to module.*

Features

- *Elimination of thick, inefficient busbar and high temperature soldering.*
- *Wires embedded into a polimeric film with one external busbar along the end.*
- *Layers laminated and vacuum sandwihced at low temperature, eliminating thermal shock typical of traditional busbar that often induce cell to crack.*

GREENFLEX

TEST: Tables show actual production data against the expected for each PV plant

Plant 2	Plant 2 vs. Average Weather Data		
	expected production Plant 2 (Basis: 900 kWh/kWp)	actual production Plant 2	difference in % to expectation
Feb 08	1.042,20	1.860,00	78,47%
Mar 08	1.532,70	1.781,00	16,20%
Apr 08	2.085,30	2.025,00	-2,89%
May 08	2.453,40	3.263,00	33,00%
Jun 08	2.593,80	2.748,00	5,94%
Jul 08	2.637,00	2.976,00	12,86%
Aug 08	2.514,60	2.775,00	10,36%
Sep 08	1.839,60	1.915,00	4,10%
Okt 08	1.165,50	1.493,00	28,10%
Nov 08	612,90	961,17	56,82%
Dez 08	429,30	396,27	-7,69%
Total	**18.906,30**	**22.193,44**	**17,39%**
kWh/kWp	875,29	1.027,47	152,18

Plant 1	Plant 1 vs. Average Weather Data		
	expected production Plant 1 (Basis: 900 kWh/kWp)	actual production Plant 1	Difference to expectation
Feb 08	1.158,00	1.932,00	66,84%
Mar 08	1.703,00	1.876,00	10,16%
Apr 08	2.317,00	2.153,00	-7,08%
May 08	2.726,00	3.221,00	18,16%
Jun 08	2.882,00	2.760,00	-4,23%
Jul 08	2.930,00	3.120,00	6,48%
Aug 08	2.794,00	2.879,00	3,04%
Sep 08	2.044,00	1.966,00	-3,82%
Okt 08	1.295,00	1.530,00	18,15%
Nov 08	681,00	1.000,18	46,87%
Dez 08	477,00	450,74	-5,51%
Total	**21.007,00**	**22.887,92**	**8,95%**
kWh/kWp	875,29	953,66	78,37

FLAT, FLEXIBLE & HYBRID Solar Modules

INNOVATION AT COMPETITIVE PRICE

Our modules incorporate significant technological advances developed by Day4 in Canada, all designed to accomplish one thing:
"Provide more energy over the life-time of the product".
It also improves power output and performance in both low light conditions and at higher temperatures compared to standard solar modules.

Superior collection in low light conditions.
The presence of silver particles leads to reduced levels of cell efficiency under low light conditions. Our cells have less silver since they don't need silver ribbon's soldering.

Industry's best temperature performance
PV modules produce less energy when they get hot. Higher operating temperatures result in lower energy yields. The cell's interconnection wires act as a heat-sink.
This "self-cooling" PV cell technology helps to give the best temperature performances.
A lower temperature means better efficiency, longevity and more electricity.

FLEXIBILITY

The innovative cell interconnection technology and low soldering temperature allows to manufacture PV modules with different architecture, like Flexible ones.
Greenflex is introducing an innovative flexible module that eliminates the known limitations of thin film and amorphous solar panels: Low efficiency and poor longevity

Flexi panel

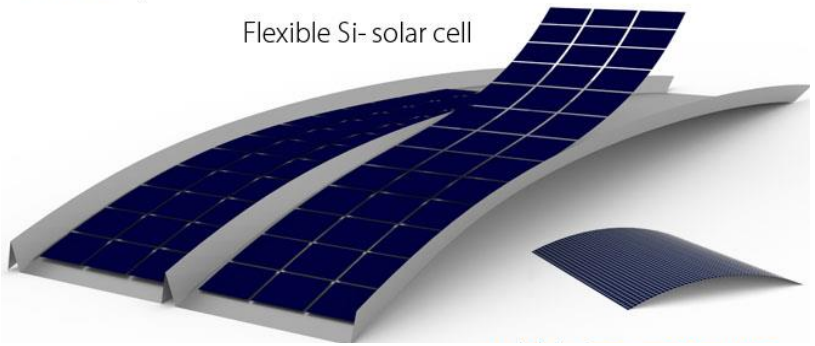

FLAT, FLEXIBLE & HYBRID Solar Modules

THE HYBRID PV+PVT SOLAR MODULE SOLUTION

Greenflex Flat PV modules with Day4 technology may also be installed in “Tandem” with an aluminum back panel containing cooling liquid.

This Hybrid version is ideal for installation in very hot climates and on residential buildings needing also hot water.

This PV+PVT module is able to generate electricity and hot water from the same unit.

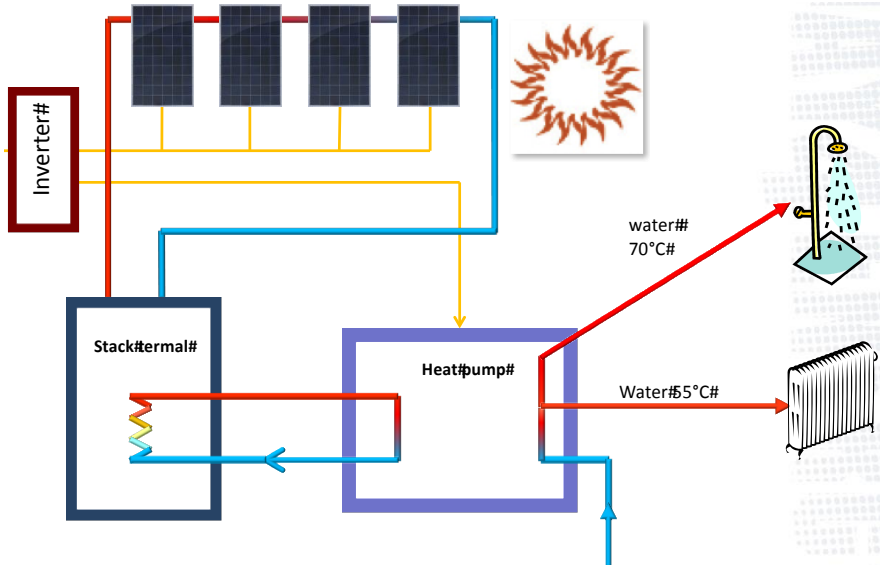

ENERGY AUTHONOMY

Greenflex engineers have configured an easy-to-install an energy saving system able to meet the power needs of a residential complex, including:

- Electric solar energy for light and appliances
- Hot water for home
- Energy for low-temperature heating systems
- Energy for innovative A/C cooling systems

GREENFLEX

RESIDENTIAL SOLAR KIT

Modular and Expandable 3 / 4 / 6 / 8 / 12 kWA
The system will produce electricity and hot water with a small footprint.
Easy to installa on roofs and/or walls.
Designed for energy efficient AC appliances.

A 12 Volt system is sufficient to run washing machine, refrigerator, A/C conditioning system, computers, stereo TV and lights.

Battery Pack
the system will operate off-grid for several hours (night).

INNOVATION IN INVERTER TECHNOLOGY

- A system designed for integrating all elements of the KIT
- Without Transformer to reduce weight and electric losses.
- A single modular system expandable from 3 to 12 kWA.
- Wathertight for outdoor installation and without moving parts or fan.
- The absence of moving parts increases reliability and eliminates noise.
- The inverter includes an auxiliary plug to connect additional sources of rebewable energy (wind, sterling motor, etc.)
- The system has a built-in electronic control for optimizing the electric functions (MPPT) of solar modules and cabling.
- Next generation battery pack (no lead and fully reciclables) allows the system to work in areas without electric power (or with frequent power interruptions)
- The system switch automatically to “Island” configuration or connected to the grid, without need of manual actions.

ENERGY SAVINGS & ARCHITECTURAL INTEGRATION

Greenflex Flat, Flexible and Hybrid PV Modules are the ideal solution for architectural integration.

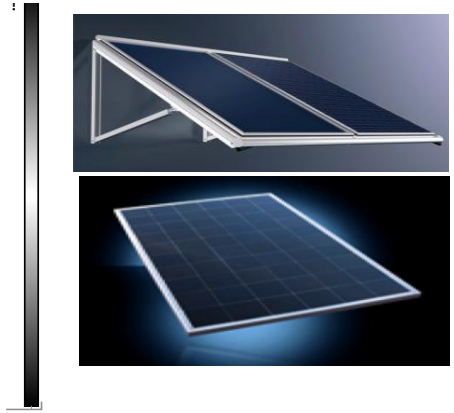

Celle!Colorate!

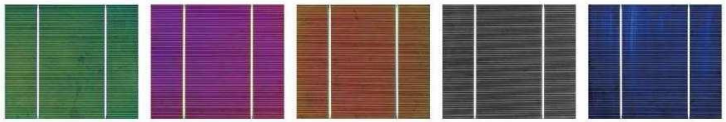

Easy roof or wall installation and may also replace or be attached to balcony railings

GREENFLEX

Technical specs of the Greenflex Module
Flat PV 60 MC-I

Same specs will apply for:
Flexi PV 60 MC-I / F
Hybrid PV 60 MC-I / H

DAY4 ENERGY

60MC-I

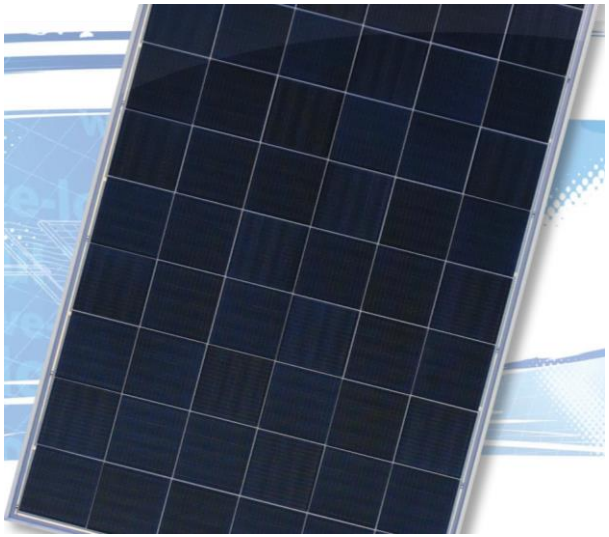

Typical Electrical Performance at STC (1000W/m², AM 1.5 Spectrum, cell temperature 25°C)

Power Class	Watts	225	230	235	240	245*	250*
Peak Power (Wp)**	Watts	225	230	235	240	245	250
Max. Power Voltage (V_{mp})	Volts	29.47	29.52	29.77	30.03	30.29	30.55
Max. Power Current (I_{mp})	Amps	7.62	7.80	7.89	7.98	8.08	8.17
Open Circuit Voltage (V_{oc})	Volts	36.48	36.71	36.90	37.12	37.32	37.54
Short Circuit Current (I_{sc})	Amps	8.12	8.32	8.42	8.54	8.58	8.64

Typical Electrical Performance (800W/m², AM 1.5 Spectrum, cell temperature 25°C)

Power Class	Watts	225	230	235	240	245*	250*
Peak Power (Wp)**	Watts	180.1	184.0	187.9	192.2	196.0	198.7
Max. Power Voltage (V_{mp})	Volts	29.62	29.82	29.92	30.08	30.11	30.15
Max. Power Current (I_{mp})	Amps	6.08	6.17	6.28	6.39	6.51	6.59
Open Circuit Voltage (V_{oc})	Volts	36.04	36.35	36.37	36.39	36.41	36.47
Short Circuit Current (I_{sc})	Amps	6.53	6.75	6.81	6.83	6.86	6.91

* Please check power class availability with your local sales representative as large volumes must be confirmed prior to ordering. ** Production tolerance before module sorting: ±3.5% of Pmax

Mechanical Specifications

Cells	60 cells, multicrystalline silicon, 156mm square (6+ inches)
Glass	Solar glass (tempered)
Module Connection	MC Type IV compatible
Frame	Anodized aluminum
Backsheet	Multi-layer film compound with aluminum layer

Qualification Test Parameters

Temperature Cycling Range	-40°C to +85°C (-40°F to 185°F)
Humidity Freeze	85% rH, -40°C to +85°C (-40°F to 185°F)
Static Load Front and Back	UL: 1436pa (30lbs/ft²), IEC: 2400N/m²
Front Loading (eg. Snow)	UL: 1436pa (30lbs/ft²), IEC: 5400N/m²
Fire Class (UL only)	C
Salt Mist Test (IEC 61701)	Pass
Protection Classification	IP 65

Additional Characteristics

Short Circuit Current Temp. Coefficient* (TC I_{sc})	2.67mA/K
Open Circuit Voltage Temp. Coefficient* (TC V_{oc})	-0.10V/K
Max. Power Temp. Coefficient* (TC P_{mpp})	-0.44%/K
Positive Module Sorting	in increments of +5Wp
Module Maximum Fuse Series (Amps)	15A
Module Efficiency	up to 15%
Reduction of Efficiency (from 1000W/m² to 200W/m²)	<4%
Nominal Operating Cell Temperature (NOCT)	42.3°C
Maximum System Voltage	UL: 600V, IEC: 1000V

* based on 235W

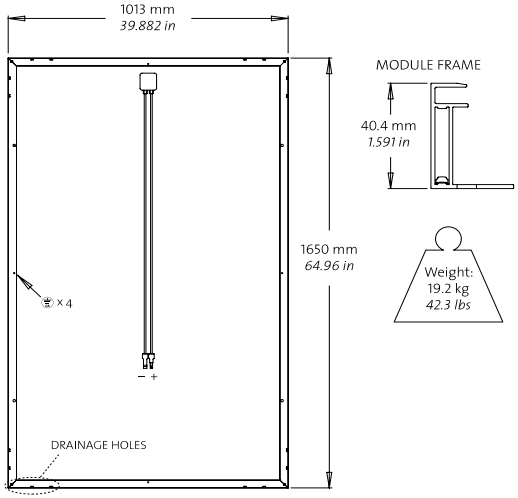

NOTE: All dimensions are accurate within ±1.5mm tolerance unless otherwise stated. Product dimensions in imperial inches (conversion of 1mm equals 0.03937in, 1kg equals 2.2lbs) are provided for information purposes only.

For more details, see Installation Manual.

Specifications and design are subject to change without notice. The features, functions and appearanc of the Day4 60MC-I module may differ from details given due to continual product development.

61215:2005
61730:2004
61701:1995

APPROVED PRODUCT
KM 569276 BS EN 61215
Photovoltaic Modules

ADVANCED
PHOTOVOLTAIC MODULES

052412a4en